E/ET-203 **HW#6, Basic electricity**

Name:_____

1) 2) and 3), For supply voltage of V_{supply} =24 Volts, and resistances, R_1=10Ω,, R_2=20Ω, R_3=30Ω, R_4=40Ω, R_5=50Ω, calculate the total resistor, total current, currents and voltages in each resistor and power dissipated in each resistor and total circuit.

1)

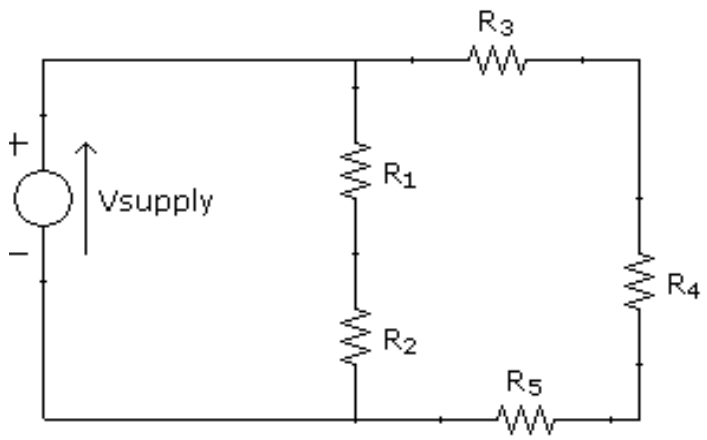

2)

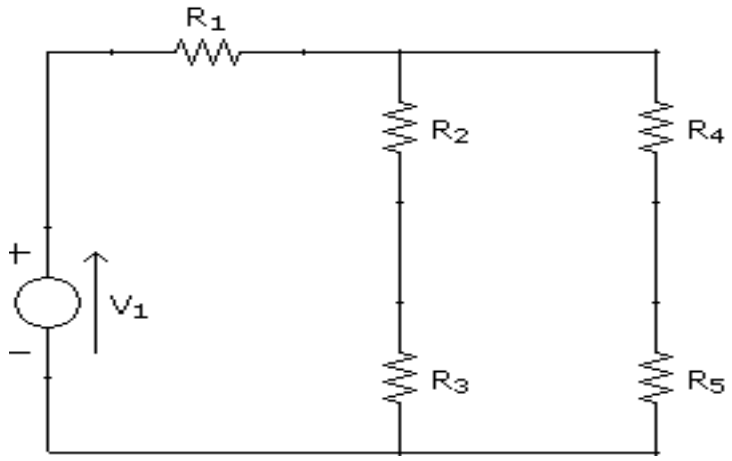

E/ET-203 **HW#6, Basic electricity**

Name:_____

3)

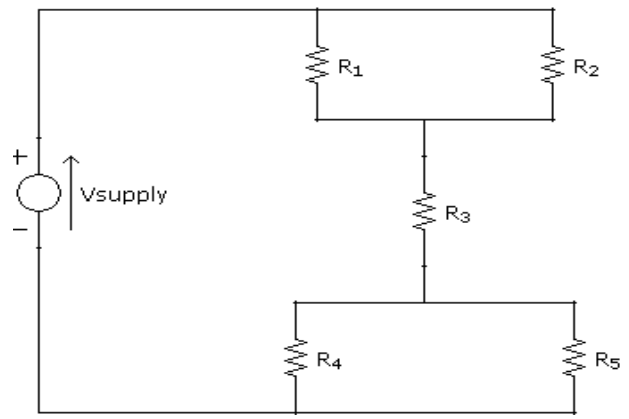
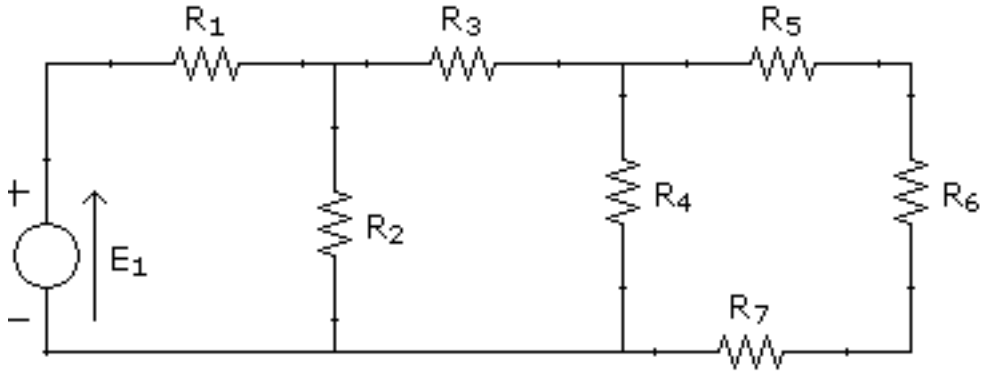
4) For supply voltage of V_{supply} =24 Volts, and resistances, R_1=10Ω, R_2=20Ω, R_3=30Ω, R_4=40Ω, R_5=50Ω, R_6=60Ω, R_7=70Ω, calculate the total resistor, total current, currents and voltages in each resistor and power dissipated in the circuit.